Mounting Nuts

Stud Nut

Part Number	Across Flats	Nut Thickness	Nut (Thread)
N12-16	1 3/32”	27/64”	3/4-16

Rod Nut

Part Number	Across Flats	Nut Thickness	Nut (Thread)
N07-20	11/16”	1/4”	7/16-20

CB-2495

Clevis Bracket
Material: steel, bright zinc plated

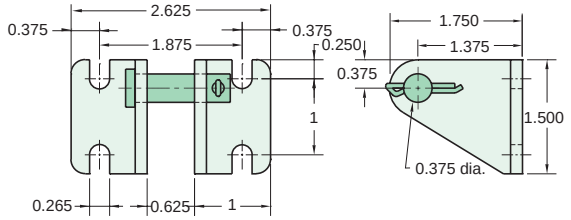

RC-2481

Rod Clevis
Material: steel, bright zinc plated

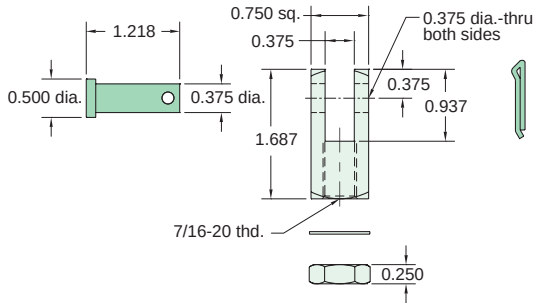

FB-2491

Foot Bracket
Material: steel, bright zinc plated

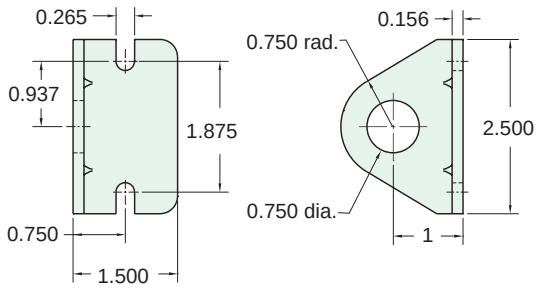

RE-2485

Rod End
Material: steel, bright zinc plated body

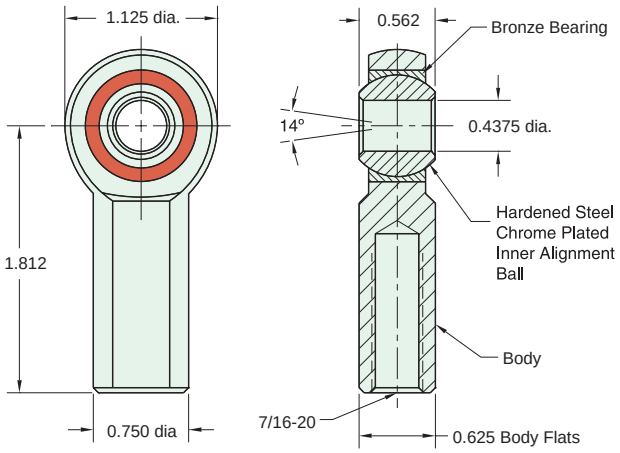

Max. Static Radial Load: 4,300 lbs.
Fits Rod Thread Size: 7/16-24